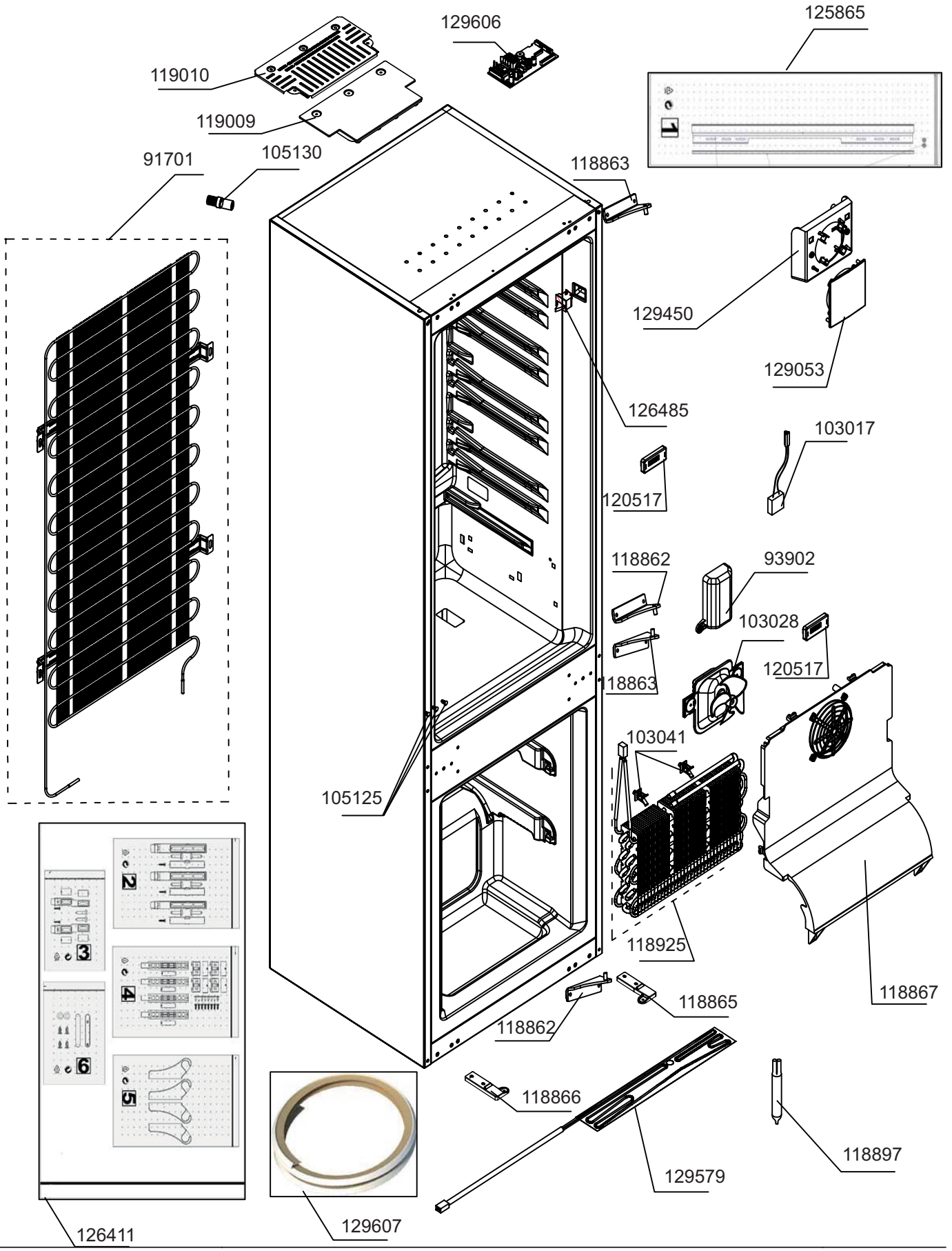
125865
129606
119010
119009
91701
105130
118863
129450
129053
126485
103017
120517
118862
93902
103028
120517
118863
103041
105125
118925
118867
118865
118862
118866
118897
129579
126411
129607

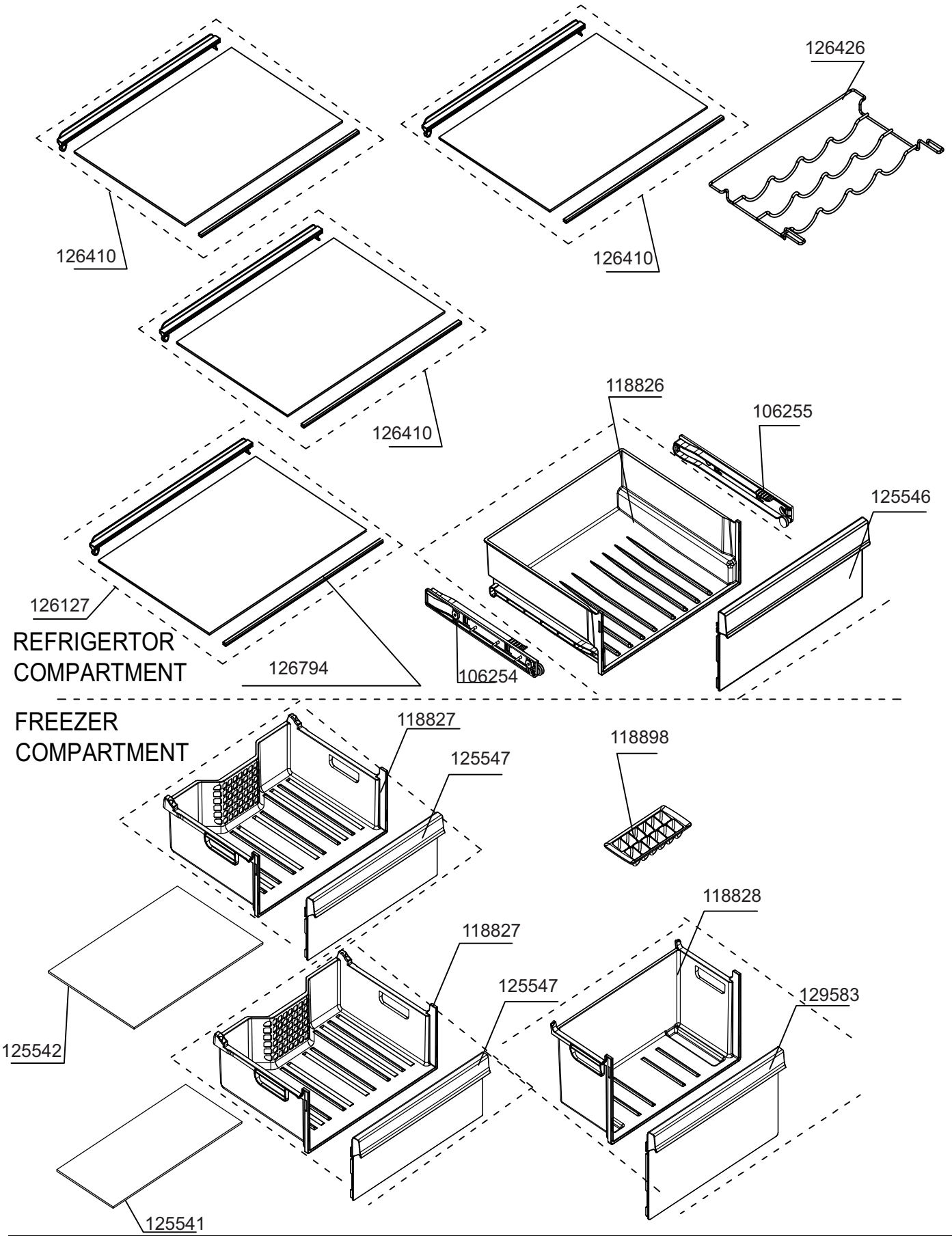
126426
126410
126410
126410
118826
106255
125546
126127
REFRIGERTOR
COMPARTMENT
126794
106254
FREEZER
COMPARTMENT
118827
125547
118898
118828
118827
125547
129583
125542
125541

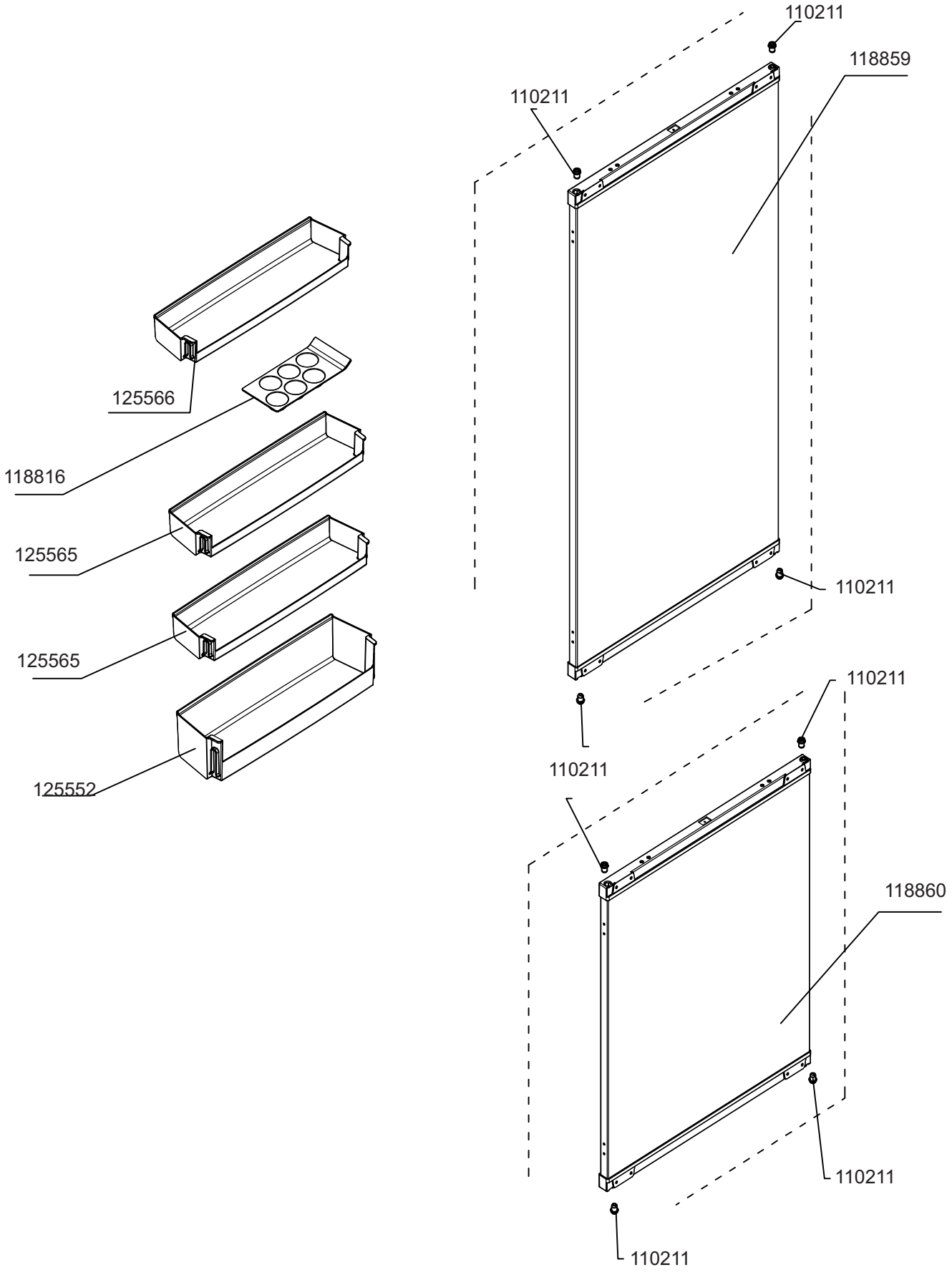
110211
118859
110211
125566
118816
125565
125565
125552
110211
110211
110211
118860
110211
110211

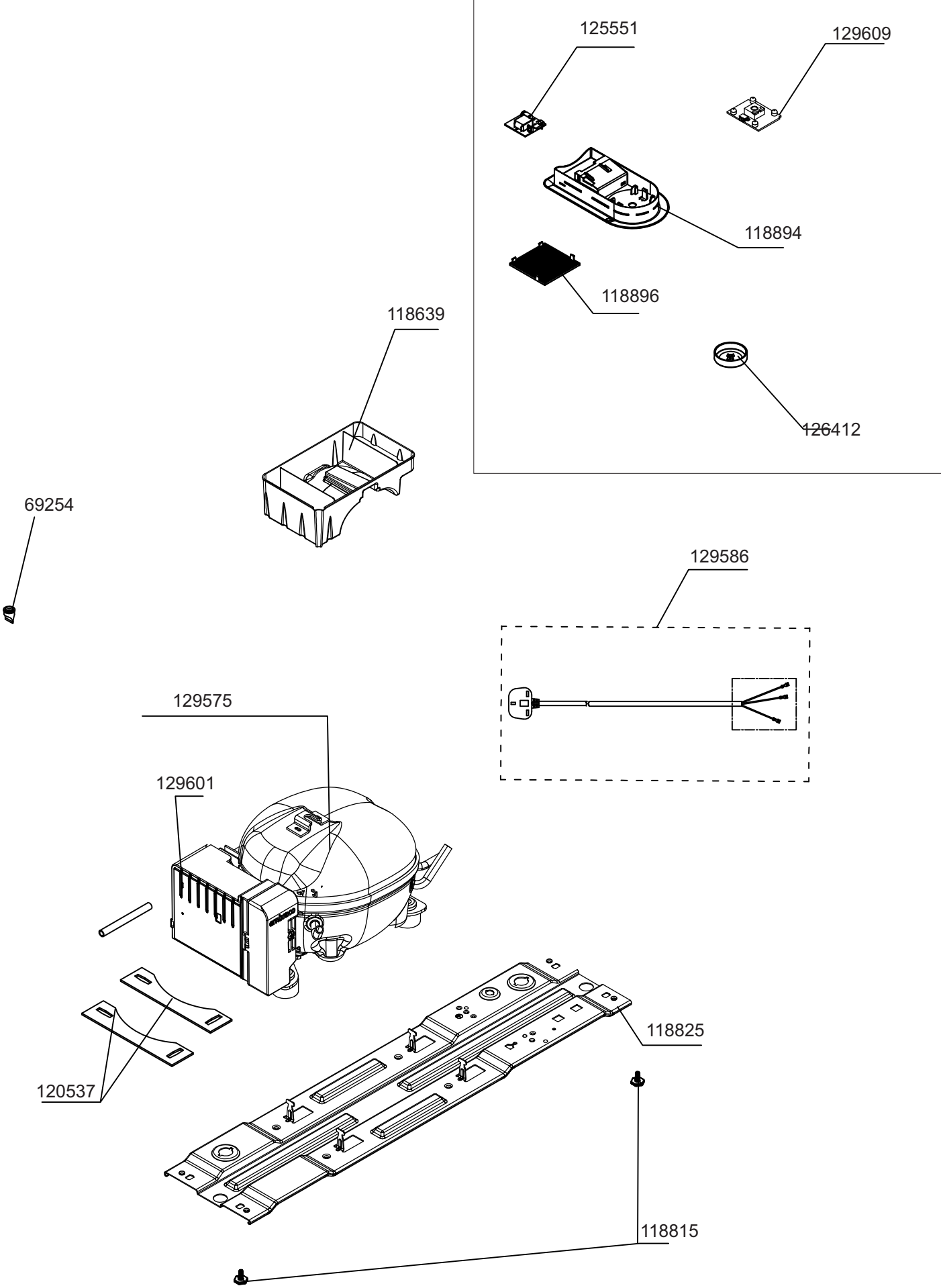
125551
129609
118894
118896
126412
118639
69254
129586
129575
129601
118825
120537
118815